Lib seen
22/6/2016

Bharatiya Vidya Bhavan's

Sardar Patel College of Engineering

(A Government Aided Autonomous Institute)
Munshi Nagar, Andheri (West), Mumbai – 400058.
Re-Examinations
June 2016

Max. Marks: **100** Duration: **03 Hours**
Class: **T.Y. B.Tech. Semester: VI** Program: **Civil Engineering**
Name of the Course: ***Hydraulic Engineering-II*** Course Code : **CE353**

Instructions:

1. Attempt ***Any Five*** questions
2. All questions carry equal marks
3. Answer to each question to be started on the fresh page
4. Assume suitable data if necessary and mention it clearly.
5. Draw neat diagrams.
6.

Master file.

Question No.		Maximum Marks	Course Outcome Number	Module No.
Q1	(a) Explain with neat sketches velocity distribution in: (i) smooth pipes and (ii) rough pipes.	(10)	CO1	01
	(b) Average point velocities measured with the help of a pitot tube at mid point and quarter point of a 25 cm diameter pipe were found to be 1.50 meter/sec and 1.30 meter/sec respectively. If the flow in the pipe is turbulent, determine the discharge, friction factor and average height of roughness projections.	(10)		
Q2	(a) Define the terms: (i) boundary layer (ii) boundary layer thickness (ii) drag force (iv) lift force and (v) momentum thickness.	(10)	CO1	02
	(b) For a velocity distribution $(u/U) = 2(Y/\delta) - (Y/\delta)^2$ find displacement thickness, boundary layer thickness, momentum thickness and energy thickness.	(10)		
Q3	(a) Discuss: Stream lined bodies, bluff bodies, Friction drag and pressure drag with neat sketches.	(10)	CO4	03
	(b)What is Magnus effect? Explain the phenomenon in detail.	(10)		
Q4	(a) Explain significance of specific energy curve in channel flow.	(10)	CO2	04
	(b) Design most economical trapezoidal channel section for a discharge of 20 cu.m. per sec, bed slope of channel is 1 in 1550 and Manning's constant = 0.018. Take side slope as 1H: 1V.	(10)		

Q5	(a) Explain: (i) Venturiflume, (ii) Broad crested weir. (b) Classify: hydraulic jump and derive an expression for loss of energy in hydraulic jump.	(10) (10)	CO3	05/06
Q6	(a) Derive the dynamic equation for GVF for a wide rectangular channel. Also explain the flow profiles in mild sloped channel. (b) A 3 m wide rectangular channel conveys 8 cum/sec of water with a velocity of 4 m/sec. Is there any condition for hydraulic jump to occur? If so, calculate the height and length of the jump. Also determine the energy loss.	(10) (10)	CO3	06
Q7	(a) Explain primary quantities and derived or secondary quantities and dimensionless quantities used in dimensional analysis. (b) The head loss due to friction 'hf' in a pipe depends upon diameter of pipe 'D', friction factor 'f', length of pipe 'L' and rate of flow through pipe 'Q'. Obtain an expression for loss of head using Buckingham's-π method.	(10) (10)	CO5	07

****

PTO

lib section
21/6/2016

Bharatiya Vidya Bhavan's

Sardar Patel College of Engineering

(A Government Aided Autonomous Institute)

Munshi Nagar, Andheri (West), Mumbai – 400058.

Re Examination

June 2016

Max. Marks: 100
Class: T. Y. B. Tech.
Semester: VI
Name of the Course: Geotechnical Engineering II

Duration: 3 hours
Program: Civil
Course Code: CE351

Instructions:

1. Question No. 1 is compulsory.
2. Attempt **any four** out of remaining six questions.
3. State clearly any assumptions made and state units for all quantities.
4. Assume suitable data if necessary and state the same clearly.

Master file.

Q. No.			Max. Marks	Course Outcome Number	Module No.
1	a	Explain the advantages and disadvantages of concrete piles	05	1	4
	b	Explain the filtering and drainage function of geosynthetics	05	2	7
	c	Compare Rankine's and Coulomb's earth pressure theories.	05	1	1
	d	Classify conduits and illustrate a positive projecting conduit with a neat sketch.	05	1	5
2	a	A group of 16 piles having a diameter of 500 mm are placed 1m center to center. The piles are placed in clay (cohesion 30kN/m^2) and are 9 m long. Determine the ultimate bearing capacity of the pile group if end bearing is neglected and adhesion factor is assumed to be 0.6	10	1	4
	b	Explain the different modes of failure of shallow foundations with neat sketches.	05	1	3
	c	Why are joints necessary in retaining walls. Explain the different types of joints with neat sketches	05	2	2
3	a	A retaining wall is 9m high and retains dry sand with ϕ=33°. If the top 3m of sand has γ (kN/m^3) = 21 and below that is γ (kN/m^3) = 27, calculate the magnitude and point of application of the resultant active earth pressure.	10	1	1
	b	Explain the plate load test in detail as per IS1888.	10	1	3
4	a	What are the stability requirements of a retaining wall? Derive an expression for factor of safety against overturning.	10	2	2
	b	Illustrate with a neat sketch the distribution of pressures for a sheet pile wall in cohesive soils	05	1	6

	c	Explain the importance of ground water level on determining the bearing capacity of shallow foundations.	05	1	3
5	a	A wall footing is to rest on a soil having the following properties: c (kN/m^2) = 25, ϕ (degrees) = 35, $\gamma_d(kN/m^3)$ = 18.9 and $\gamma_{sat}(kN/m^3)$ = 19.9. Determine the safe load on a 1.5m wide footing placed at 1.3 m below the ground surface if water table is located at 2 m below ground surface. Use IS code recommendations and neglect depth factors. Assume FOS as 2.5	05	1	3
	b	If in the above problem, the wall footing is replaced by a footing of 1.3 m x 1.3 m size and if ground water rises to GL, what will be the safe load?	05	1	3
	c	Write a short note on negative skin friction in pile foundations.	05	1	4
	d	Differentiate between active and passive earth pressure.	05	2	1
6	a	Determine the safe load on a flexible pipe with outside diameter of 100cm which is to be laid in a trench 1.2m wide and backfilled by clay 4 m high having unit weight of $18.3kN/m^3$. Assume c_d = 3.4	05	1	5
	b	With the help of neat sketches, show the proportioning of gravity type and cantilever type retaining walls.	05	1	1
	c	State advantages and disadvantages of sheet piles	05	1	6
	d	Illustrate with a neat sketch a geosynthetic reinforced soil slope and highlight the main components.	05	1	7
7	a	A 400 mm diameter pile is 8 m long and is driven into a sandy deposit having a friction angle of 34 degrees, $\gamma_b(kN/m^3)$ = 16.2 and $\gamma_{sat}(kN/m^3)$ = 18.3. Considering Nq = 29 k=1.2 and δ = (2/3) ϕ, calculate the ultimate load the pile can carry if the ground water is 3 m below ground surface.	10	1	4
	b	Explain settlement ratio of a positive projecting conduit. Illustrate with a neat sketch projection condition	05	1	5
	c	Draw the typical pressure distribution for a sheet pile wall retaining cohesionless soil. Clearly show the dredge line	05	1	6

Bharatiya Vidya Bhavan's

Library
2401011c

SARDAR PATEL COLLEGE OF ENGINEERING

(An Autonomous Institution Affiliated to University of Mumbai)

Munshi Nagar Andheri (W) Mumbai 400058

Re-examination
June-July 2016

Max. Marks: 100 | **Duration: 3 Hrs**

Class: T.Y. B. Tech | **Semester: VI**

Name of the Course: Environmental Engineering I | **Program: B. Tech Civil**

Course Code: CE 355

Master file.

Instructions:

~~**Q1 is compulsory and attempt any four questions out of remaining six**~~

Draw neat sketches/diagrams wherever required

Assume suitable data if necessary and state them clearly

Figure on right indicate maximum marks for the given question, course outcomes attained and module no. of questions

---

Q1 **Fill in the blanks** **(20)**

(a) **(10)** **CO1-CO4** **M.1 To M.7**

1. _____ and _____ are the coagulants used in water treatment.
2. Two methods for disposal of solid waste are _____ and _____
3. _____ and _____ are two methods to remove salts in water treatment
4. _____ is the law of minimum
5. _____ is used to remove salinity in water.
6. _____ process is used to clean rapid sand filter
7. _____ is a naturally occurring ion exchange.
8. pH of alkaline water is _____.
9. Aeration of water removes_____ and _____.
10. Hazardous waste can be defined by _____ and _____.

(b) Explain ozone depletion **(05)** **CO1** **M.1**

(c) Explain ecology and ecological pyramids **(05)** **CO1** **M.2**

Q2 **Answer of following questions** **(20)**

(a) Population forecasting is to be done for a developing town for the year 2040 to develop a water treatment facility. The data available is tabulated below. Use three appropriate methods to predict the population for 2050. **(10)** **CO1, CO4** **M.3**

Year	1970	1980	1990	2000	2010
Population	40000	42000	48000	50000	56000

(b) Explain the physical, chemical and biological properties of water. **(10)** **CO1** **M.4**

Q3	**Answer the following questions**			
(a)	Explain water supply scheme and discuss their importance.	**(10)**	**CO2, CO3**	**M3, M4**
(b)	Draw, explain and predict efficiency for conventional surface water treatment	**(150**	**CO1-CO4**	**M.4**
Q4	**Answer the following questions**	**(20)**		
(a)	**a) Explain** process of flocculation.	**(10)**	CO2-CO4	M.5
	b) Design a paddle flocculator for 16 MLD plant with following details: Detention time= 20 min Average G= $50s^{-1}$ Speed of paddles = 6 rpm K=0.25 $\mu = 1.0087X10^{-3}$ ρ=998 kg/m^3 at 20°C Ratio of L:B= 2.0, Assume other dimensions if required.			
(b)	**Explain types of settling tank. Design a circular settling tank for 3MLD water supply**	**(10)**	**CO2-CO4**	**M.5**
Q5	**Answer the following questions**			
(a)	Explain construction and working of rapid sand filters	**(10)**	**CO1-CO4**	**M.5**
(b)	Explain the concept of pressure and multimedia filters with diagram	**(10)**	**CO3, CO4**	**M.5**
Q6	**Explain with short notes**	**(20)**		
(a)	**Water softening** **(b) Aeration**	**(10)**	**CO1-CO3**	**M.6**
(c)	**Disinfection** **(d) Deflouridation**	**(10)**	**CO1-CO4**	**M.6**
Q7	**Answer the following questions (any four)**			
(a)	Explain solid waste and the management of the same in Indian context.	**(10)**	**CO4**	**M.7**
(b)	Explain the process of pyrolysis	**(05)**	**CO4**	**M.7**
(e)	Explain soil pollution and ways to remediate the soil pollution	**(05)**	**CO2**	**M.2**

Lib Seehn
18/5/2016

Bharatiya Vidya Bhavan's

SARDAR PATEL COLLEGE OF ENGINEERING

(An Autonomous Institution Affiliated to University of Mumbai)

Munshi Nagar Andheri (W) Mumbai 400058

End Semester Exam
May - June 2016

Max. Marks: 100 | **Duration: 3 Hrs**

Class: T.Y. B. Tech | **Semester: VI**

Name of the Course: Environmental Engineering I | **Program: B. Tech Civil**

Course Code: CE 355

Instructions:

Attempt any five questions out of seven

Draw neat sketches/diagrams wherever required

Assume suitable data if necessary and state them clearly

Master file.

Figure on right indicate maximum marks for the given question, course outcomes attained and module no. of questions

---

Q1	**Answer of following Questions**	**(20)**		
(a)	State and explain Leibig's law of minimum with examples and figure.	**(05)**	**CO3**	**M.1**
(b)	Draw and explain neat sketch of nitrogen and carbon cycle?	**(10)**	**CO3**	**M.1**
(c)	Explain classification of noise with sources, effects of noise and measures to prevent noise pollution.	**(05)**	**CO4**	**M.2**
Q2	**Answer of following questions**	**(20)**		
(a)	A town of Ramgarh has a population of **10,000 in 2020**. The water supply scheme is to be developed for the area for the year **2040**. The past census records are provided in table 1. Calculate the population for which water supply system is to be designed using any two appropriate methods for developing city.	**(05)**	**CO1, CO4**	**M.3**

Table 1.

Year	1980	1990	2000	2010	2020
Population	6,000	7,500	8,000	9,000	10,000

(b)	As a city engineer of Ramgarh city which water demands are to be considered for a growing city. Further explain the factors affecting rate of demand.	**(10)**	**CO1, CO2**	**M.3**
(c)	Explain the test conducted in laboratory to find the biological characteristics of water sample and explain indicator organisms.	**(05)**	**CO1**	**M.4**
Q3	**Answer the following questions**			
(a)	Explain the main aim of surface water treatment. Deliberate on methods /technologies which are used to achieve the aim.	**(05)**	**CO2, CO3**	**M3, M4**
(b)	For the city of Ramgarh as mentioned in Q2(a) there are **two sources** of water **surface water source** and **ground water source**. **Deliberate** on the characteristics of water from each source. **Draw** a flowsheet for the treatment of	**(15)**	**CO1-CO4**	**M.4**

each water source. **Describe** the function of each unit in the flowsheet. **Comment** on the efficiency of each unit with respect to relevant characteristic.

			(20)		
Q4	**Answer the following questions**				
(a)	**Explain** process of **coagulation. Design (dimensions and power requirement) rapid mixing unit** for the population **for the year 2020** for Ramgarh town having a water demand of **150 lpcd**. Give suggestion on alternative to rapid mixing.		(10)	CO2-CO4	M.5
(b)	**Explain theory of filtration and actions causing filtration. Design rapid sand filter for (size and underdrainage system)** for the population for **the year 2020** for Ramgarh town having water demand **150 lpcd.**		(10)	CO2-CO4	M.5
Q5	**Answer <u>any two</u> of the following questions**				
(a)	Explain the concept **Ideal Settling Tank**. **Design ideal** settling tank for the population for **the year 2020** for Ramgarh town having water demand **150 lpcd.**		(10)	CO1-CO4	M.5
(b)	**Explain with short notes : (a) Backwashing (b) Breakpoint chlorination**		(10)	CO3, CO4	M.5
(c)	Explain the characteristic of a good disinfectant. Explain disinfectants used in water treatment. Find chlorine consumed in kg/day and chlorine dosage in mg/L for the city of Ramgarh in 2020 if the residual chlorine **is 0.2 mg/L** and a **chlorine demand is 0.6 mg/L.**		(10)	CO3, CO4	M.5
			(20)		
Q6	**Answer the following questions**				
(a)	Explain **ion exchange process** for water softening. For Ramgarh water sample contains **following impurities** as shown **in table 2**. Compute annual requirements of **slaked lime and soda for the year 2020** for Ramgarh town having water demand 150 lpcd. Purity of slaked lime is 80% and soda is 90%		(10)	CO1-CO3	M.6
	Table 2:				
	$MgCl_2$= 100 mg/L	$Mg(HCO_3)_2$= 200 mg/L	NaCl= 25 mg/L		
	SiO_2= 10 mg/L	$CaSO_4$= 150 mg/L			
(b)	Ramgarh's surface water source has **high amount of color, odour and fluorides**. As a city engineer explain any two techniques you would incorporate to solve the aforesaid problems		(10)	CO1-CO4	M.6
Q7	**Answer the following questions (any four)**				
(a)	Explain Hazardous wastes and techniques to treat them		(05)		M.7
(b)	Explain incineration process with figure		(05)		M.7
(c)	Draw a chart showing functional units of solid wastes and ennumerate factors affecting generation rate		(05)		M.7
(d)	Explain landfill with a figure		(05)		M.2
(e)	The noise levels at L_{100},L_{80},L_{60},L_{40},L_{20} and $L_5$are 60db, 68db,70db,71db,73db and 80db respectively, measured during an hour of the day. Find out Lavg.,Leq and NC at the location.				

Formula Sheet

$P_n = P_o\left[1+\frac{r}{100}\right]^n$ $P_n = P_o + n\bar{x} + \frac{n(n+1)}{2}\bar{y}$ $\log_e\left[\frac{P_s - P}{P}\right] - \left[\frac{P_s - P_o}{P_o}\right] = -kP_s * t$ $P_n = (P_o + n\bar{x})$ $r = \sqrt{r_1 * r_2 * r_3 * \ldots\ldots * r_n}$	Al=27 Ca=20 C=12 O=16 S=32 Cl=35.5 H=1 Na=23 Fe= 55.5 Mg=24 Si=14	WLR=Q/B WLR= Q/2лR DT= V/Q SOR= 12-20 $m^3/d/m^2$ SOR= 24-30$m^3/d/m^2$
SA=volume/SOR	G =300-700s^{-1} 0.5 min to 1 min	P=$\frac{1}{2}C_d\rho.A_p.v_r^3$ $C_d = 1.8\ for\ flat\ paddles$ $\rho = 998kg/m^3$ $v_r = (1-0.25)v_p$
Ratio of length to diameter of lateral ≤ 60 Spacing of laterals= spacing of orifices= 150 to 300 mm Dia of perforations 5 to 12 mm (spacing 80 mm for 5 and 200 mm for 12mm) Total area of perforations≤ 0.5 Total c/s area of laterals Total area of perforation = 0.002 to 0.003 Entire filter area Area of manifold= 1.5 to 2 times laterals Rate of filtration = 300 to 500l/hr/m^2 Rate of filtration = 3000-6000l/hr/m^2 Max. demand= 1.8 Q	$v_s = \frac{1}{18}\frac{g}{v}(S_s - 1) * d^2$ Value of υ=1.002X10^{-6} m^2/sec $v_d = \sqrt{\left(\frac{8\beta}{f'}\right)(S_s - 1)dg}$ $f' = 0.025 - 0.03$ g=9.8m/s^2	Q/A; Q/ perimeter; Q/b; V/Q V= D^2 (0.011D+0.785H)
$G = \sqrt{\frac{P}{\mu * V}}$ μ=1.0087*10^{-3}Ns/m^2		$G * t = \frac{V}{Q} * \sqrt{\frac{P}{\mu V}} = \frac{\sqrt{PV/\mu}}{Q}$

lib section
2015/2016

Bharatiya Vidya Bhavan's

Sardar Patel College of Engineering

(A Government Aided Autonomous Institute)
Munshi Nagar, Andheri (West), Mumbai – 400058.
END SEM
May- 2016

Max. Marks: 100
Duration: 3 hr
Class: TY-Btech
Name of the course: Theory of RC and Prestressed concrete.

Q.P. Code: CE 356
Course Code : CE 356
Sem-VI
Program: Civil Engineering

Instructions:

1) Question No. 1 is compulsory
2) Attempt any FOUR from the remaining questions.
3) Use of IS 456:2000 is permitted.
4) Assume data wherever necessary and draw reinforcement details wherever necessary.
5) Figures to right indicate full marks.

Master file.

Question No			Maximum Marks	Course Outcome Number
1)	a)	A short column 300mm x 300mm is reinforced with 4 bars of 20 mm diameter .Determine the safe working load on the column. Use M-20 and Fe-415	05	1
	b)	Explain the necessity of using high strength concrete and high tensile steel in prestressed concrete.	05	2
	c)	Name different methods of post tensioning. Explain any one method in detaial.	05	2
	d)	Derive expression for the position of neutral axis and moment of resistance of balanced rectangular section.	05	1
2)	a)	Design a doubly reinforced rectangular beam having size 230mmx450mm effective.The beam is supported over clear span of 4m,carrying udl of 12kN/m.Adopt M20 and Fe 415	15	1
	b)	What are the assumptions in working stress method?	05	1
3)		Design simply supported slab of a room having internal dimensions 4mx5m.The corners are to be held down. Take L.L as 3 kN/m^2 and floor finish as 1.5 kN/m^2. Use M20 and Fe-415.Draw reinforcement details showing bottom plan and section along long span and short span. Give appropriate checks.	20	1

4)	a)	A reinforced concrete Tee beam has the following dimensions: Flange width:2000mm; Width of rib:300mm; Depth of rib :700mm Depth of flange:120mm Steel provided:6 bars of 25mm diameter Span:8m Use M20 and Fe-415.Find safe udl beam can carry.	10	1
	b)	A simply supported beam of span 6m and dimensions and dimensions 250mmx600mm effective carries a udl of 30kN/m.The beam is reinforced with 5 bars of 20mm diameter. Design shear reinforcement. Adopt M25 and Fe 415.	10	1
5)	a)	An unsymmetrical I section beam is used to support an imposed load of 3kN/mover a span of 8m.The sectional details are: Top flange-300mm wide and 60mm thick Thickness of web-80mm Bottom flange-100mm wide and 60mm thick Overall depth of beam is 400mm At the centre of span, effective prestressing force of 100kN is located at 50mm from soffit of beam.Determine stresses at centre span section of the beam for the following conditions: 1) Prestress+ self weight 2) Prestress+ self weight+ live load	10	2
	b)	A post tensioned concrete beam is prestressed by a circular cable having area of 800mm2 with zero eccentricity at ends and 150mm at centre.The span of beam is 10m.The cable is to be stressed from one end such that an initial stress of 900N/mm2 is available in the unjacked end immediately after anchoring. Determine the stress in the wires at jacking end and the percentage loss of stress due to friction. μ=0.6 and k=0.003/m.	10	2
6)	a)	Design a short RC column to take an axial load of 5000kN.The size of column is not to be more than 700mm.Use spiral reinforcement.Use M25 and Fe 415.Draw reinforcement details.	12	1
	b)	Design a short rectangular column to carry an axial load of 1200kN.One side of column is restricted to 300mm.Adopt M-20 and Fe-415. Draw reinforcement details.	08	1
7)		A prestressed concrte beam (I beam) has top flange 1400x200mm,bottom flange 700mmx200mm and web 180x2000mm(depth of web).The beam is prestressed with wires having area of 300mm2 located at 50mm from soffit and carrying an initial stress of 1200N/mm2.Span of beam is 10m.Calculate percentage loss of stress in wires if beam is a) Pretensioned b) Post tensioned Es=200kN/mm2;Ec=35kN/mm2;Relaxation of steel stress=5%of initial stress.Shrinkage of concrete=$300x10^{-6}$for pretensioning and $200x10^{-6}$for post tensioning. Creep coefficient=1.6.Anchorage slip=1mm. μ=0.6 and k=0.0015/m.	20	2

Lib sen 16/5/2016 219

Bharatiya Vidya Bhavan's

Sardar Patel College of Engineering

(A Government Aided Autonomous Institute)
Munshi Nagar, Andheri (West), Mumbai – 400058.

End Semester Exam
May 2016

Max. Marks:100 **Duration: 3 hours**
Class: T. E. **Semester: VI** **Program: Civil**
Name of the Course: Transportation Engineering - II **Course Code : CE354**

Master file.

1. **Question No 1 is compulsory.**
2. **Attempt any four questions out of remaining six.**
3. **Draw neat diagrams**
4. **Assume suitable data if necessary**

Que. No		Marks	CO
Q1	**write short notes on (Solve any Four)**	20	1,2,3
(a)	Different type of joints of cement concrete pavement.		
(b)	Temperature Stress in Rigid Pavement		
(c)	Difference between Flexible and Rigid Pavement		
(d)	Desirable Properties of Subgrade soils.		
(e)	Explain different type of traffic signs.		
(f)	Grade separated intersection		
Q2			
(a)	Discuss with sketch construction procedure of highway embankment	07	03
(b)	Define the term WBM. How will you construct WBM type subbase and Base of Flexible Pavement	07	03
(c)	Discuss Different failure of Flexible pavement	06	03
Q.3			
(a)	Explain in detail the complete procedure started from map study to location survey required for locating new highway	10	1
(b)	The existing flexible pavement was tested using Benkelman Beam with a test vehicle of ESWL 4085 and tyre pressure of 5.6 kg/cm^2. The observations recorded at a pavement temperature of 40^0 c are given bellow. 1.46, 1.52, 1.56, 1.76, 1.96, 1.74, 1.68, 1.74, 1.96, 1.42, 1.56, 1.62, 1.68, 1.90, 1.89 Calculate the thickness of bituminous concrete overlay to be provided over the existing pavement. Assume following data, (i) allowable deflection = 1.25 mm, (ii) subgrade moisture content = 1.2, (iii) Use IRC approach for overlay design.	10	3
Q.4.			
(a)	Discuss assumptions' made in Burmister two and Three Layers Theory.	05	2
(b)	Two Lane single carriageways carries a traffic of 1200 commercial vehicle per day, rate of growth of traffic is 7 %, period required for construction of road after last count is 4	08	2

	years. Design life of the pavement is 15 years. Calculate the cumulative number of standard axle for a highway passing through (i) plain area (ii) Hilly area.		
(c)	Design a pavement section by triaxial method using following data: Wheel load = 4100 Kg, Radius of contact area = 15 cm, traffic coefficient = 1.5, rainfall coefficient = 0.9, design deflection = 0.25 cm, E- Value for subgrade = 60 kg/cm^2, E-value for base = 225 kg/cm^2, assume 7.5 cm thickness bituminous layer to be provided at the top of base course having E- value 1100 kg/cm^2. Also, draw a section of Pavement	07	2
Q.5.			
(a)	Use of Geotextile and Geogride in Highway Construction.	06	3
(b)	Enlists the different test to be carried out on Road aggregate. Explain any one in detail.	07	2
(c)	An ascending gradient of 1:25 meets another ascending gradient of 1:100. Find the length of summit curve to be provided for required SSD. Assume design speed = 80 km/hr.	07	1
Q.6.			
(a)	What are the factors to be consider while selecting the bridge site.	06	2
(b)	What is Afflux and Scouring depth. Explain its importance in bridge construction.	07	3
(c)	A bridge has a linear waterway of 150 m across a stream whose natural waterway of 220 m. If the average flood discharge is 1200 m^3/ sec, average flood depth is 3 m. calculate afflux under the bridge.	07	2
Q.7			
(a)	Discuss Different types of survey to be carried out for Origin and Destination study.	10	1
(b)	The speed range and corresponding number of vehicles are given draw the frequency curve and determine (i) Upper and lower value of speed limits for traffic regulation. (ii) Speed for geometric design. (Refer Table No . 1)	10	1

Table No . 1

Speed range (kmph)	Number of vehicles	Speed range (kmph)	Number of vehicles
0-10	12	50-60	255
10-20	18	60-70	119
20-30	68	70-80	43
30-40	89	80-90	33
40-50	209	90-100	09

Bharatiya Vidya Bhavan's

Sardar Patel College of Engineering

(A Government Aided Autonomous Institute)
Munshi Nagar, Andheri (West), Mumbai – 400058.
End Semester Examinations
May 2016

Max. Marks: **100**
Class: **T.Y. B.Tech. Semester: VI**
Name of the Course: ***Hydraulic Engineering-II***

Duration: **03 Hours**
Program: **Civil Engineering**
Course Code : **CE353**

Instructions:

1. Attempt ***Any Five*** questions
2. All questions carry equal marks
3. Answer to each question to be started on the fresh page
4. Assume suitable data if necessary and mention it clearly.
5. Draw neat diagrams.

Question No.		Maximum Marks	Course Outcome Number	Module No.
Q1	(a) Explain Causes of turbulence, mechanism of turbulence and Reynold's stresses in pipe flow.	(10)	CO1	01
	(b) Derive an expression for velocity distribution for turbulent flow in smooth circular pipe and hence derive the expression for velocity distribution in terms of average velocity.	(10)		
Q2	(a) Derive: Von-Karman momentum integral equation. State its use.	(06)	CO1	02
	(b) What is effect of pressure gradient on boundary layer separation?	(06)		
	(c) For the velocity profile of $(u/U_0) = 2\eta - \eta^2$, Where $\eta = (y/\delta)$. Calculate Boundary layer thickness;	(08)		
Q3	(a) Write short note on;		CO4	03
	(i) Circulation and Magnus effect;	(06)		
	(ii) Streamlined and bluff bodies.	(06)		
	(b) Find the difference in the drag force on a flat plate of size 2 meter x 2 meter when the plate is moving at a speed of 6 meter/sec, normal to its plate when;	(08)		
	(i) moving in water and			
	(ii) moving in air of density 1.25 kg/m^3. Take coefficient of drag as 1.10.			
Q4	(a) What do you understand by hydraulically efficient channel? Derive an expression for hydraulically efficient triangular channel.	(06)	CO2	04
	(b) In a rectangular channel prove that; for a critical state of flow: $V/\sqrt{g.y} = 1$, where V = velocity of flow, g = acceleration due to gravity and y= depth of flow in the channel.	(06)		
	(c) Design most economical trapezoidal channel section for a discharge of 25 cu.m. per sec, bed slope of channel is 1 in 2500 and Manning's constant = 0.020. Take side slope as 1H : 1V	(08)		

PTC

Q5	(a) Explain with neat sketch: Venturiflume.	(06)	CO3	05/06
	(b) Explain: flow profiles in case of mild sloped channel.	(06)		
	(c)Derive: differential equation for gradually varied flow. State assumptions clearly.	(08)		
Q6	(a) Define Hydraulic jump and derive expression for loss of energy in it.	(06)	CO3	06
	(b) Explain: Waves and surges in open channels.	(06)		
	(c) Determine the length of back water curve caused by afflux of 1.25 m in a rectangular channel width 45 m and depth 2.0 m The slope of the bed is given as 1 in 2250. Take Manning's N = 0.025.	(08)		
Q7	(a) What do you understand by Dimensional homogeneity? Explain.	(06)	CO5	07
	(b) Explain the term distorted and undistorted models and scale effects in model studies.	(06)		
	(c) Obtain an expression for the critical depth 'Yc' in a rectangular channel which depends on a discharge 'Q', gravitational acceleration g, and angle of channel 'θ' using any dimensional analysis method	(08)		

****

PTO

Bharatiya Vidya Bhavan's

Sardar Patel College of Engineering

(A Government Aided Autonomous Institute)

Munshi Nagar, Andheri (West), Mumbai – 400058.

End Semester Exam

May 2016

Max. Marks: 100 **Duration**: 3 hours

Class: T. Y. B. Tech. **Semester**: VI **Program**: Civil

Name of the Course: Geotechnical Engineering II **Course Code:** CE351

Master file.

Instructions:

1. Question No. 1 is compulsory.
2. Attempt **any four** out of remaining six questions.
3. State clearly any assumptions made and state units for all quantities.
4. Assume suitable data if necessary and state the same clearly.

Q. No.			Max. Marks	Course Outcome Number	Modu No.
1	a	State how pile foundations are classified as per IS:2911	05	1	4
	b	Explain the following terms related to conduits. • Projection condition • Ditch condition • Critical plane • Plane of equal settlement • Settlement ratio	05	1	5
	c	Draw the typical pressure distribution for a sheet pile wall retaining cohesionless soil. Clearly show the dredge line.	05	2	6
	d	Draw a typical cross-section of a MSEW.	05	1	7
2	a	Explain the pile load test as per IS: 2911	10	1	4
	b	Calculate the resultant active thrust for a 5 m high retaining wall that retains sandy backfill with sloping backfill at 15°, $\phi=32^{o}$ and γ= 16.86 kN/m^3. Assume the back of the wall as vertical and smooth. Will you use Coulomb's theory or Rankine's theory? Justify your choice.	05	2	1
	c	A contractor at a site is refusing to put adequate drainage behind a retaining wall. Convince him why an appropriate drainage system is necessary.	05	2	2
3	a	Explain the conditions under which local shear failure of soil under a shallow footing may take place. Estimate the factor of safety against shear failure of soil with c= 0.12 kg/cm^2, $\phi=26^{o}$ and γ= 1.76 g/cc, if it is supports a wall footing of width 1.2 m at a depth of 1 m below the ground surface. The actual load on the footing is 24t per meter length of the wall. Use IS:6403 recommendations and neglect depth factors. Comment on the adequacy of the factor of safety and provide recommendations	10	1	3

		if applicable. Refer to **Table 1** for Bearing capacity factors.			
	b	In a two layered cohesive soil, bored piles of 45cm diameter are installed. The top layer has a thickness of 4.5 m and the bottom one is of considerable depth. The undrained cohesion of the top and bottom layers is $45kN/m^2$ and $100kN/m^2$ respectively. Determine the length of the bored pile required to carry a load of 350kN, using a factor of safety of 2.0 and α = 0.5.	**05**	**1**	**4**
	c	What is settlement ratio of a conduit? Illustrate with a neat sketch, incomplete ditch condition of a negative projecting conduit	**05**	**1**	**5**
4	**a**	A 7 m high retaining wall retains soil having c=16 kN/m^2, ϕ=18° and γ=16.2 kN/m^3. The backfill is horizontal and carries a surcharge of 20 kN/m^2. Draw the active pressure when tension cracks occur and when they do not occur. Determine the magnitude and point of application of the resultant thrust.	**10**	**2**	**1**
	b	Explain in detail the procedure to estimate the embedment depth of a sheet pile wall retaining purely cohesive soil. Illustrate with neat sketches	**10**	**2**	**6**
5	**a**	Proportion the area of a combined footing for two columns A and B using the following data. The allowable soil pressure is $70kN/m^2$ and the columns are spaced 3 m center to center. The footing should not extend 0.5m beyond center of column A. Show the arrangement with all dimensions. Column | A | B Size | 0.3m x 0.3m | 0.4m x 0.4m Load | 500 kN | 1000kN	**10**	**1**	**3**
	b	Explain the construction of imperfect ditch conduit with neat sketches	**05**	**1**	**5**
	c	What are the various functions of geosynthetics? Explain any one in detail.	**05**	**2**	**7**
6	**a**	A 50cm diameter pile with length of 15m, is driven into a deposit of sand having ϕ=32°, γ_b=17.2$kN/m^3$and γ_{sat}=18.2 kN/m^3. Assuming critical depth as 15d, ground water table at a depth of 2.5m below ground surface, N_q=32 and k.tanδ as 1.13, estimate the safe load the pile can carry. Use separate suitable factors of safety for skin friction and end bearing and explain why separate factors of safety are recommended.	**10**	**1**	**4**
	b	State how results from a plate load test are interpreted. For a sandy soil. Explain the limitations of a plate load test	**05**	**1**	**3**
	c	Explain the procedure for estimating active earth pressure by Culmann's graphical method	**05**	**1**	**1**
7	**a**	Determine the maximum and minimum pressure under the base of a cantilever retaining wall shown in Fig. 1. The soil parameters are c= 0, ϕ=40° and γ= 17 $kN/m^3$and the angle of	**10**	**2**	**2**

		friction at the base may be taken as 30°. Assuming $\gamma_{concrete}$= 23.5kN/m^{3}and no friction between soil and stem of wall, also estimate the factor of safety against sliding.			
	b	Differentiate between the three zones of failure when soil fails in general shear mode	**05**	**1**	**3**
	c	Differentiate between active pressure, passive pressure and at rest pressure	**05**	**1**	**1**

Fig 1. Question 7a

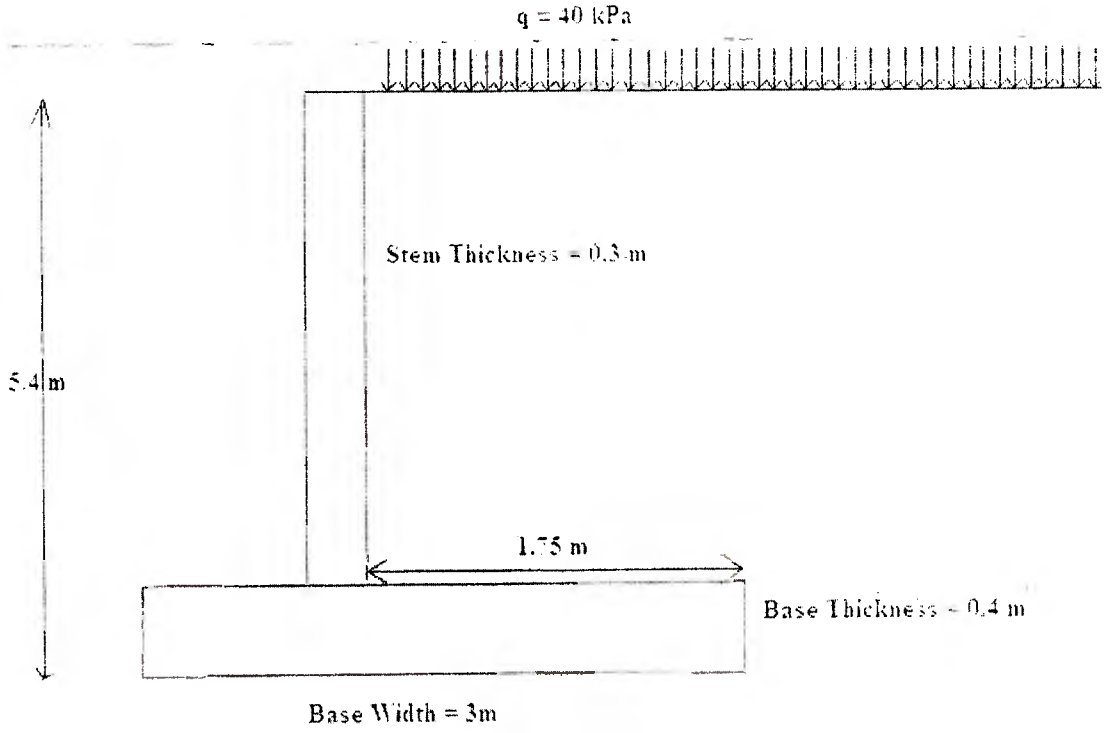

Table 1. Question 3a

ϕ	N_c	N_q	N_γ	ϕ	N_c	N_q	N_γ
14	10.37	3.59	2.29	**26**	22.25	11.85	12.54
16	11.63	4.34	3.06	**28**	25.8	14.72	16.72
18	13.10	5.26	4.07	**30**	30.14	18.40	22.4
20	14.83	6.40	5.39	**32**	35.49	23.18	30.21
22	16.88	7.82	7.13	**34**	42.16	29.44	41.06
24	19.32	9.60	9.44	**36**	50.59	37.75	56.31

lib
11/5/16

Bharatiya Vidya Bhavan's

Sardar Patel College of Engineering

(A Government Aided Autonomous Institute)
Munshi Nagar, Andheri (West), Mumbai – 400058.
End semester exam
November 2015 / May 2016

Q. P. Code:
Max. Marks: 100 Duration: 4 hr
Class: T.E Semester: VI Program: Civil
Name of the Course: DDSS Course Code : CE352

Master file.

Instructions:

1. Q.1 is compulsory. Attempt four out of remaining six questions.
2. Assume suitable data wherever necessary and state it clearly.
3. Figures to the right indicate full marks.
4. Use of IS 800-2007 and Steel table is allowed.

Q.1 The truss shown in the figure has end A as hinged and end G as roller support. Member loads are as follows. **20M**

Member	DD (kN)	LL (kN)	WL (kN)
CH	6 (C)	6 (C)	25 (T)
CD	22 (T)	22 (T)	80 (C)

Design these members considering proper partial safety factor and combination and bolted connection. Draw details of joint 'C'.

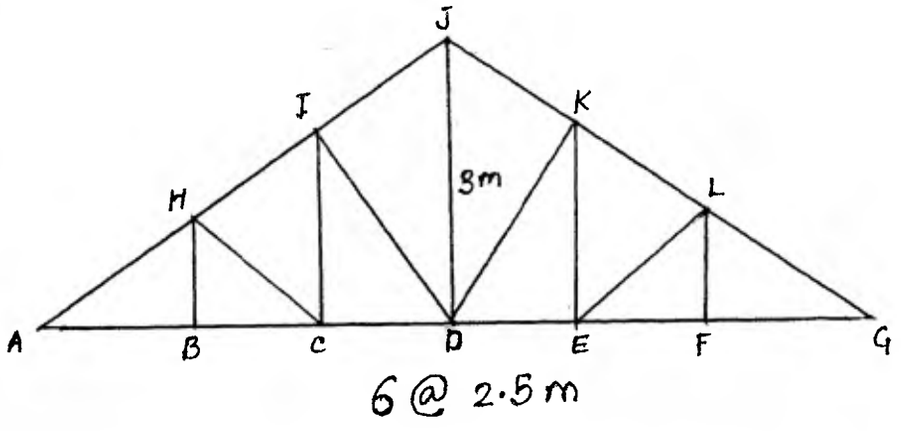

Q.2	For a floor system shown in figure. Design beams B2, B3 and B4 laterally supported. Consider 1) LL = 5 kN/m^2 2) Total dead load = 4 kN/m^2 External beams supports 150 mm thick brick wall of height 3 m. Take unit weight of concrete and brick as 25 kN/m^3 and 20 kN/m^3 respectively. 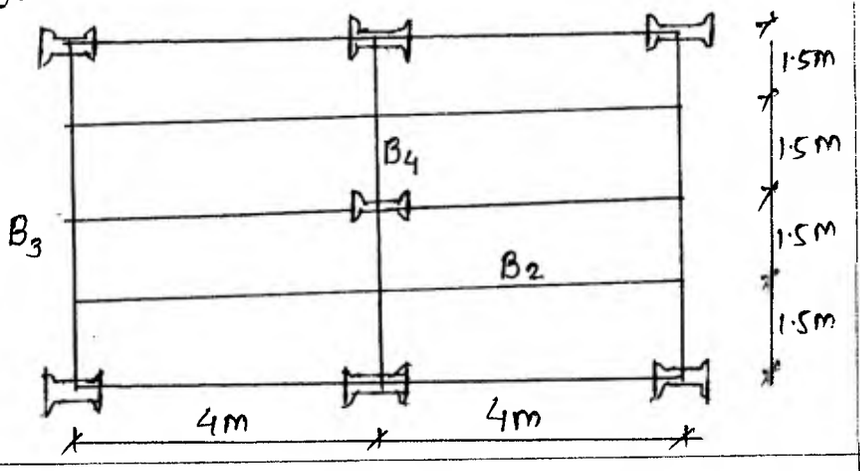 	20M
Q.3	Design the built up column with two channels toe to toe. The length of the member is 8 m with both the ends hinged, it carries 1200 kN load. The channels are connected by single lacing. Design the lacing system. Draw neat sketches showing plan and elevation. (design the lacing system using bolted connection.)	20 M
Q.4 **a)**	Design a single angle section to carry an axial compressive load of 150 kN (Factored). Also design the connection using M16 bolts of grade 4.6. Angle section is connected by 10 mm thick gusset plate at ends. Consider effective length of the member as 2.1 m.	08M
b)	2 ISMC-400 having a spacing of 260 mm between the webs is used as a column carrying factored load of 5000 kN. Design gusseted base as well as concrete pedestal; consider that the face of the column and that of base plate are machined. Use M25 bolts of grade 4.6 for connection of gusset angle of size ISA 200x100x15. Consider M15 and S.B.C of soil as 300kN/m^2.	12M

Q.5		
a)	Design single unequal angle section to resist factored tensile load of 600kN. Consider M20 bolts of grade 4.6 for connection.	10M
b)	Design slab base and concrete pedestal for ISHB 450 @92.5 kg/m. the column has an effective depth of 6m. consider M15 and S.B.C of soil as 275 kN/m^2	10M
Q.6		
a)	Design a beam with 6.5 m effective span carrying working load of 50 kN/m including the self weight of the beam. The overall depth of the beam is restricted to 500 mm. the compressive flange of the beam is laterally supported.	14M
b)	How section classification (plastic, compact, semi-compact & slender) is done w.r.t moment-rotation curve.	6M
Q.7		
a)	A bracket plate 10 mm thick is welded to flange of column using 8 mm fillet weld as shown in figure calculate the safe load on bracket. Also calculate % increase in the load carrying capacity if fourth side was also welded. 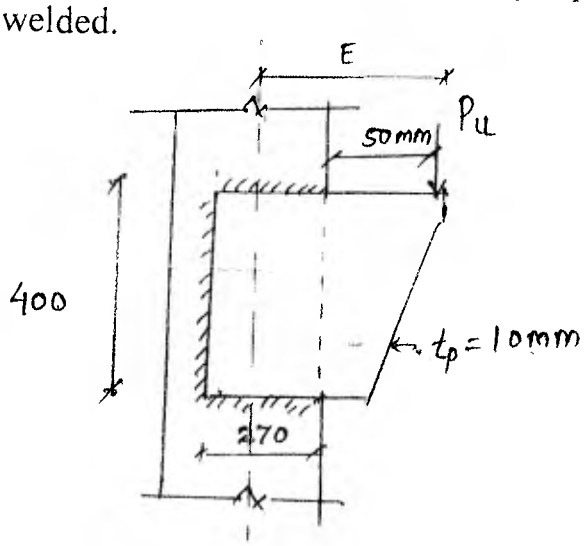	20M

*** BEST OF LUCK ***